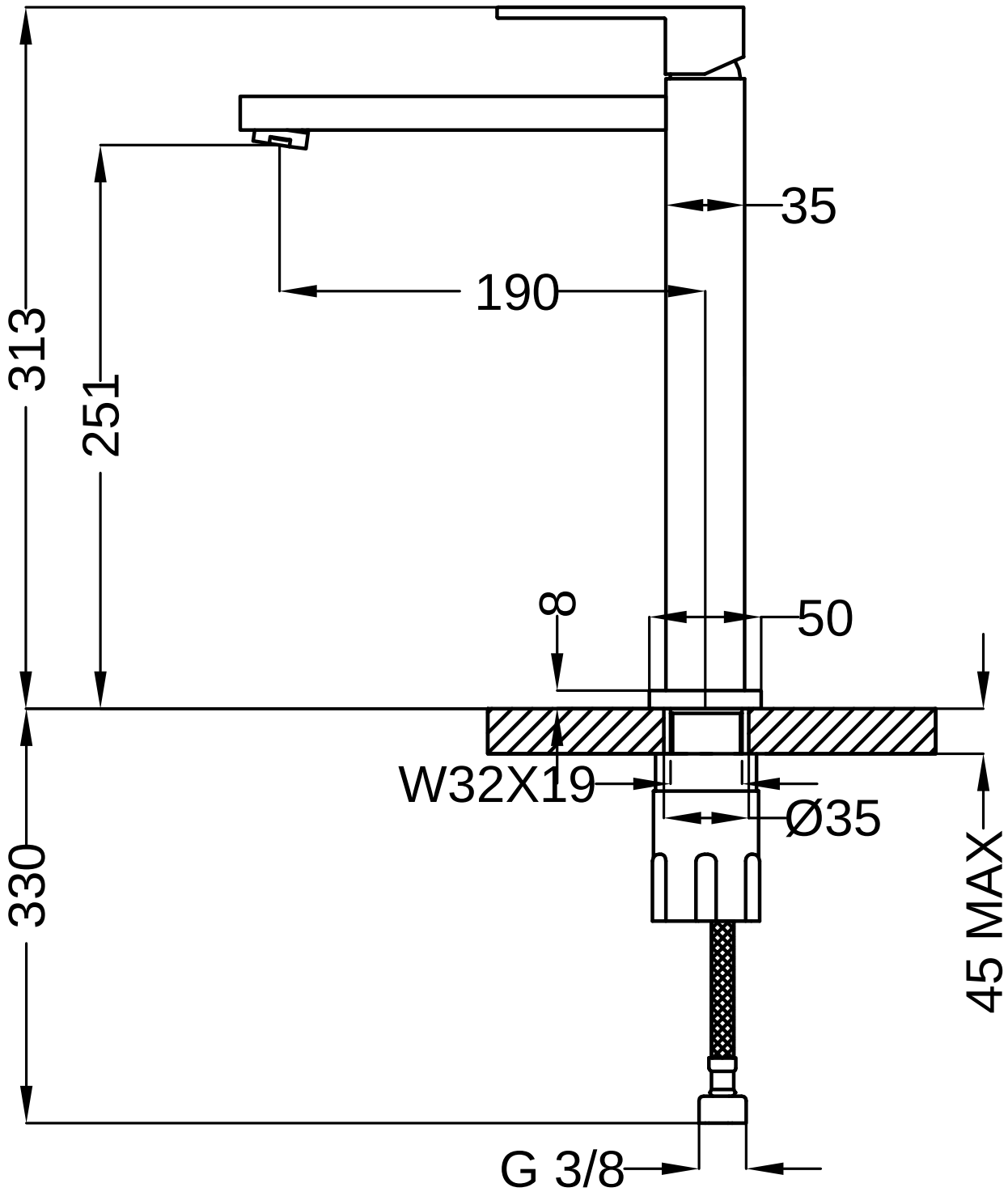
35
190
313
251
8
50
W32X19
Ø35
330
45 MAX
G 3/8